Sri Lanka Institute of Information Technology

IT1040 – Fundamentals of Computing

Year 1, Semester 1- 2025

Smart Plantation System

Proposal Document

Group 05

IT Numbers	Name
IT25102285	K.M.M.W Kumarasingha
IT25100752	G.C.N Jayawardhana
IT25101817	W.K.K.D Wijesekara
IT25100859	A.M.T.D Adikari
IT25102825	M.R.M Rifky
IT25102578	M.P.A Lakshan

Contents

Background…….3
Problem & Motivation……4
Problem…….....4
Motivation…….....4
Aim & Objectives……5
Aim…….5
Objectives..…….5
System Diagram……..6
Tools……..6
Hardware……..6
Software……..6
Method & Technologies……..7
Evolution Method ……...…8
References…….....9

Smart Plantation System

Background

Gardening is an activity people have engaged in ever since the beginning of human civilization. But, in current society, most people have tight work schedules because of workplaces demanding the very best from employees. This leaves people with no time to engage in traditional gardening activities. This issue led to the emergence of smart gardening systems, which have gained huge momentum today.

Smart plantation systems use advanced mechanisms to automate tasks that would otherwise require constant human involvement. This automation is achieved using various types of sensors with highly specific functions and by employing IoT tools to constantly monitor plant health and growing conditions. The constant monitoring of a plant's health and growing conditions ensures that a plant has optimal conditions for its growth and survival. Automation of basic plant maintenance activities through smart plantation systems saves users time, which could be allocated to solving advanced issues that come with maintaining a plantation system, such as protecting the plant from various diseases.

Problem and Motivation

Problem

The main issue with maintaining a plantation system is ensuring that the plant receives adequate water and nutrients. Also, plants tend to wither when they overheat, especially when they are at young stage. Manually checking whether the plant meets all these requirements is time consuming, and it can deter some people from maintaining a plantation system. Apart from that, making human judgements about whether the plant has met all the conditions required for optimal growth may not entirely be accurate as it requires detailed analysis of conditions such as soil moisture, temperature, and humidity. Moreover, certain plants must be moved outside after their initial stages of growing indoors. The time at which these shifting places take place is largely determined by the growth stage of the plant. Knowing when a plant is ready to be moved outside purely based on human analysis is challenging.

Motivation

There are multiple motivations behind this project. Firstly, it aims to provide plants with the best possible care. Unlike a plantation system that is cared by humans manually, the availability of sensors to detect the status of different conditions related to the plantation systems automatically enables taking immediate actions to make the conditions optimal once again. This is especially beneficial to a plant as it leaves the plant under suboptimal conditions for the least amount of time possible. Secondly, our project focuses on saving water, fertilizer, and energy. Under the traditional method of maintaining a plantation, activities such as watering the plants, adding fertilizers are all done based on human intuition. While such practises were the norm for a long period of time there were several drawbacks regarding them. On most occasions people tend to assume plants require more water and fertilizer than they need for a healthy lifecycle. As a result, overuse of water and fertilizers is a common issue related to running a plantation. This in turn, causes loss of financial and physical resources. Our smart plantation system offers the perfect solution to this problem because it optimizes resource allocation based on actual plant needs, preventing overuse. Thirdly, our project saves time and effort for users. With their busy daily

lives, it is difficult for most people to commit towards having their plantation run successfully. Even for those who manage to allocate a time for maintaining a plantation, it requires consistent effort and involvement. As our smart plantation automates the most frequent efforts the users must put in daily, it is a time saver and saves users the energy which they can direct towards solving critical issues related to a plantation such as pest control, disease management, pruning needs, and nutrient deficiencies other than basic fertilization. Lastly, our project helps more people to grow plants at home with confidence. Considering all the commitments that arise with maintaining a plantation, it might push some users away from growing plants at home. Since our project simplifies these commitments people who would otherwise refrain from having a home garden may be compelled to have their own plantation.

Aim and Objectives

The overall aim of this project is to create a smart plantation system that constantly checks plant conditions like soil moisture, humidity, temperature, and subsequently work on keeping these conditions at an optimal level along with ensuring the plant receives necessary nutrients through nourishing the plant with liquid fertilizers. Also, this project aims to clearly tell a user when a certain plant is ready to move outdoors through analysing its growth using ultrasonic sensors.

To achieve this aim we have established several key objectives.

- Monitoring of a plant's height consistently through ultrasonic sensors and finding out whether the plant is tall enough to be moved outdoors.
- With the use of multiple sensors specifically placed for monitoring individual plant conditions, constantly check temperature, humidity, and soil moisture.
- Automatically control water pumps, release of fertilizers, and fans based on the information provided by the sensors to restore the plant conditions which have deviated from the optimal.
- Send weekly plant health reports depicting how plant condition like soil moisture, humidity, and temperature has varied within the week as a graph so that the users can get a clear idea about how plant conditions change throughout the day and for spotting unusual patterns.
- Displaying the plant height on an LCD or LED screen since rough estimates by eye regarding a plant's heigh tend to be inaccurate.

System Diagram

Circuit Diagram of Smart Plantation System

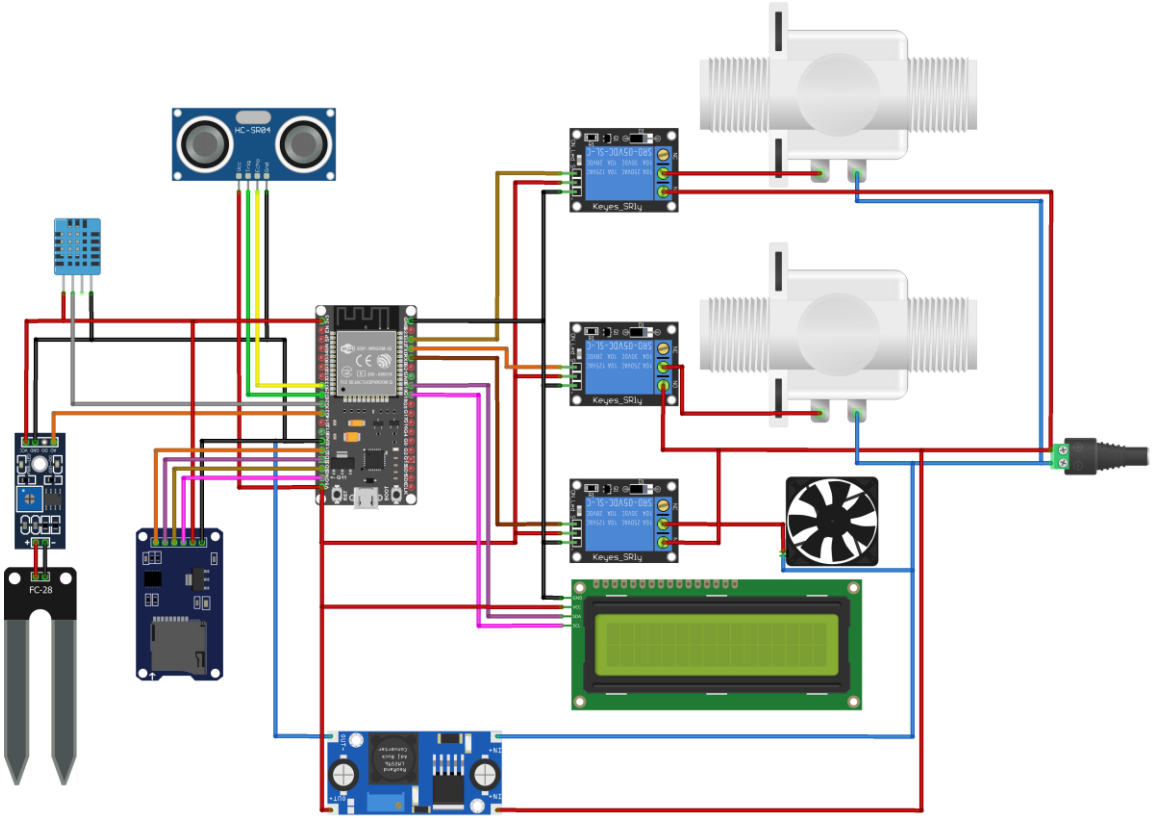

Block Diagram of Smart Plantation System

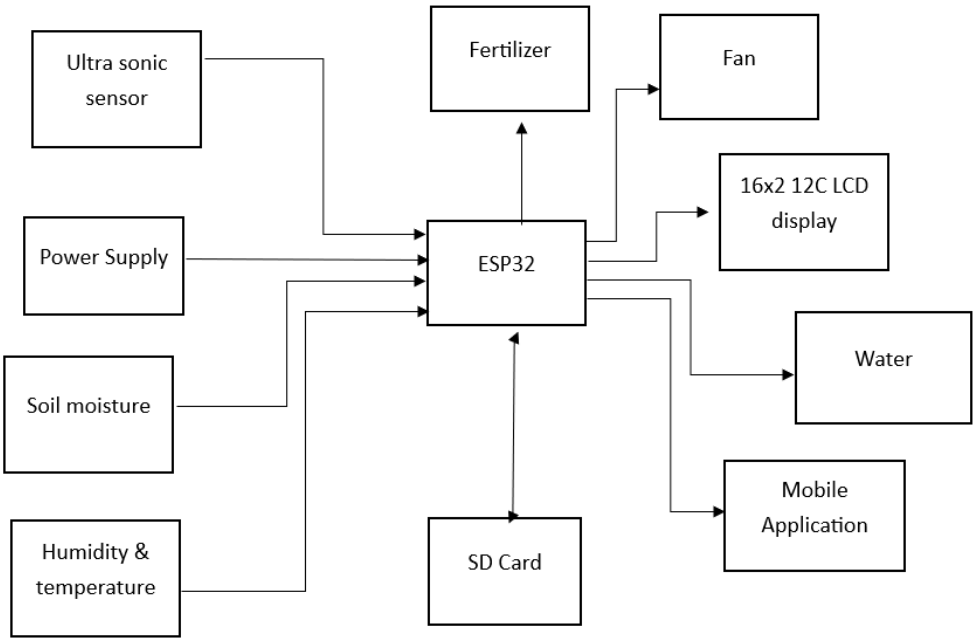

Methodology

The proposed methodology involves a robust hardware and software setup.

- Hardware setup: ESP 32 functions as the key player in controlling all the connected hardware. Soil moisture sensor, DHT11 sensor for measuring temperature and humidity, ultrasonic sensor for measuring plant height, and the devices such as pumps and fans which activate based on conditions indicated by relevant sensors are all connected to the ESP 32 board.

- Software setup: Arduino IDE is the primary software used for controlling the hardware components. Arduino IDE which has been configured to control an ESP 32 board is used to write the code required for automating the plant maintenance. Blynk app is used for designing the mobile application and connecting the Internet of Things (IoT) devices.

- Data collection: Each sensor will constantly collect relevant data about the conditions soil moisture, temperature, and humidity.

- Automation logic: Set levels are inserted into the code and devices will turn ON and OFF accordingly.

- Growth detection: The ultrasonic sensor will measure the plant height and send a notification when the plant has reached a height which makes it suitable to be moved outdoors along with displaying the measured height on an LCD or LED screen to give a clear idea about plant height.

Reporting – Based on the data constantly collected through various sensors belonging to the smart plantation system, weekly reports that indicate the variation of plant conditions in the form of graphs are generated and sent to the user through the Blynk mobile app.

Evaluation Method

To ensure the reliability and smooth functioning of the smart plantation system we decided to employ diverse evaluation methods. These methods include:

- Functional Testing: Each sensor and devices will first be tested while they operate alone and next they will be tested when working integrated to all the other devices. Testing each sensor/device alone is good for isolating issues, verifying basic functionality, calibration and accuracy check, and simplified debugging. Conversely, integrated testing is vital in verifying system integration and communication, validation of automation logic, identifying interdependencies and conflicts, and finally obtaining a real-world scenario simulation. Through utilizing both individual and integrated testing we ensure that our functional test has high accuracy.

- Accuracy testing: To make sure that our sensor readings are accurate we take the same measurements manually using traditional, physical tools and compare the results and adjust if necessary.

- User Feedback: A bunch of selected people will be asked to check the smart plantation system to see whether it is user-friendly and useful. This also provides an insight into the practical issues that arise with the use of our product.

- Report analysis: Weekly reports generated based on sensor data using the Blynk app will be double checked to make sure the graphs depict each condition variation within the week with minimum errors.

Growth detection: Check whether the system sends the right message when plant height is recorded and see if the height displayed on the LCD or LED screen tally with the real height.

References

- Arduino - https://docs.arduino.cc/tutorials/
- Arduino - https://arduino-tutorials.net/
- Blynk - https://blynk.io
- Robotszu - https://m.youtube.com/c/Robotszu
- "Internet of Things (IoT) for Smart Agriculture" – Research paper, IEEE 2020
- DHT11/DHT22 Datasheet